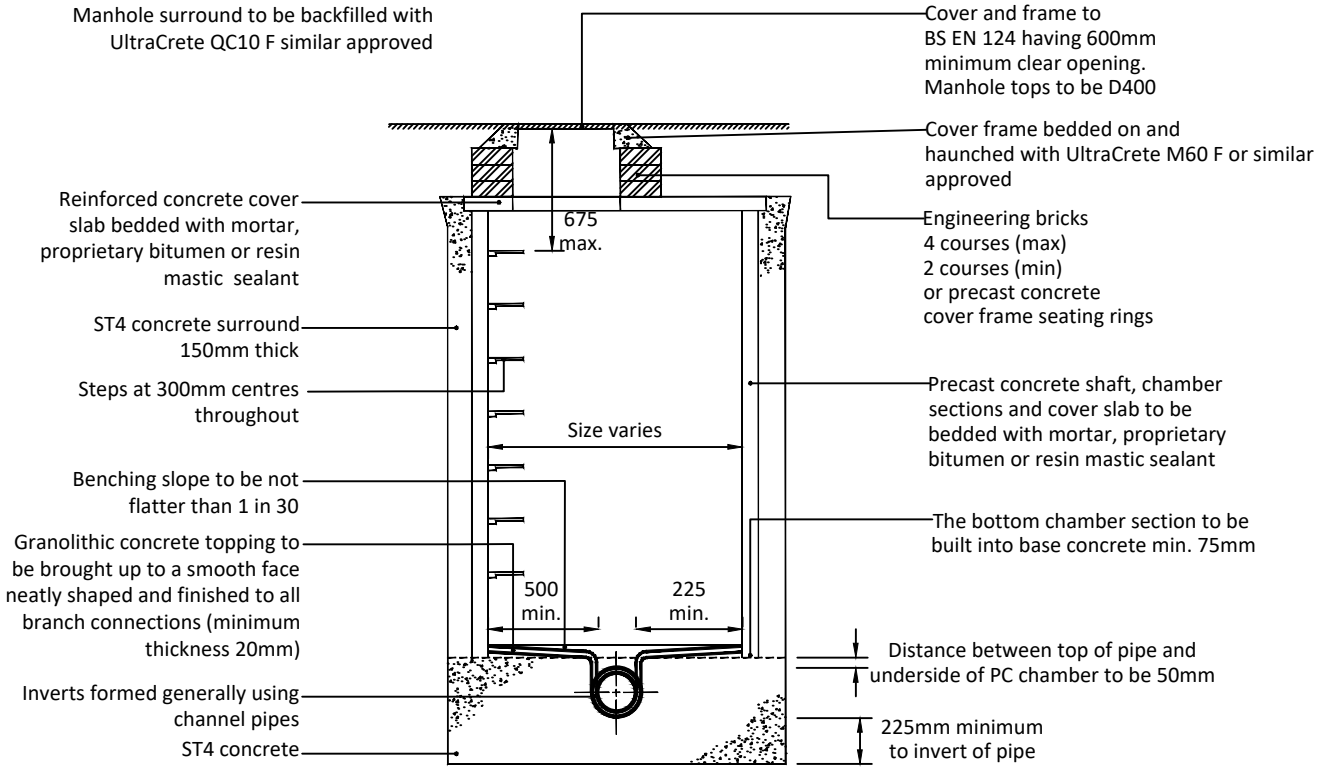

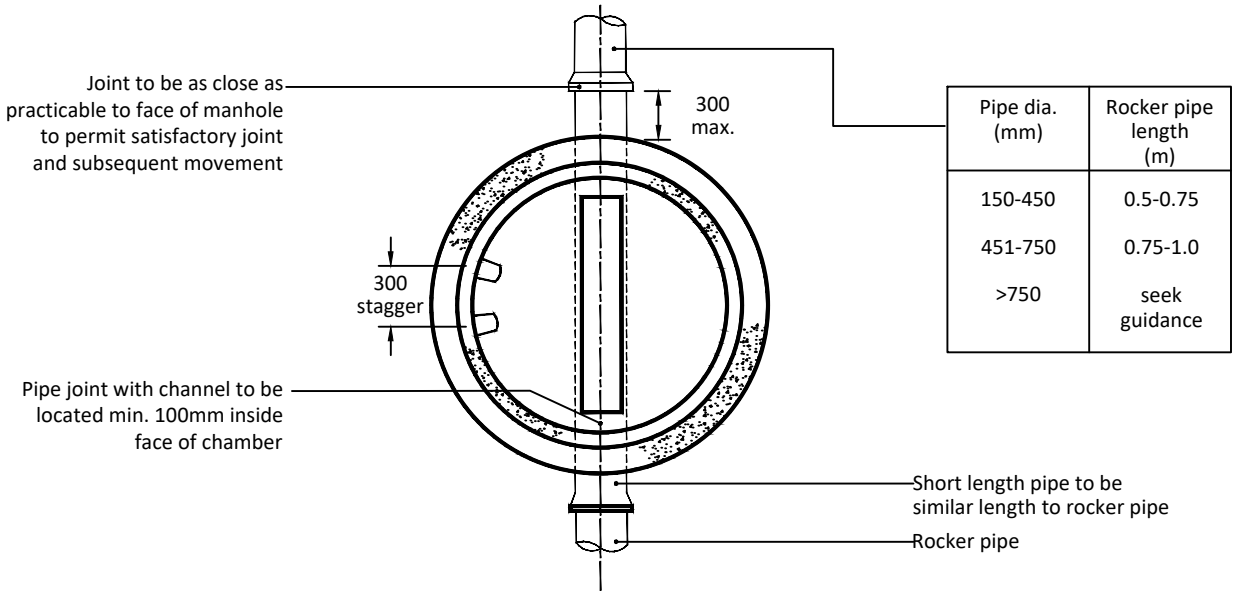

Pipe dia. (mm)	Rocker pipe length (m)
150-450	0.5-0.75
451-750	0.75-1.0
>750	seek guidance

NOTES

1. All drainage works shall be in accordance with NYC Specification Section 05.
2. Pipe bedding, laying and backfilling shall be in accordance with NYC Specification Section 05.
3. Chamber sizes shall comply with NYC Specification Table 05-04.
4. Flexible joints shall be provided to the first two pipe joints adjacent to manholes.
5. Additional protection shall be provided to pipes with cover less than 1.2 m in accordance with NYC Specification.
6. Toe holes to be provided in benching of drain greater than 450mm dia. for access to invert
7. Chambers with outgoing pipes greater than 600mm dia. shall be fitted with guard bars, safety chains or other safety devices
8. All dimensions in millimetres

Do not scale

REVISIONS	
VERSION	DETAILS
A	REVISED IN ACCORDANCE WITH NYC SPECIFICATION FOR HOUSING AND INDUSTRIAL ESTATE ROADS AND PRIVATE STREET WORKS, APRIL 2025

North Yorkshire Council
Environment Directorate

PROJECT: STANDARD DETAILS

DATE: September 2025

DRAWING TITLE: C1 - PRECAST CONCRETE MANHOLE (DEPTH TO SOFFIT 1.35m TO 3m)

SCALE: Not to Scale

Revision C

© Crown Copyright North Yorkshire Council

ORIGINAL DRAWING SIZE A4