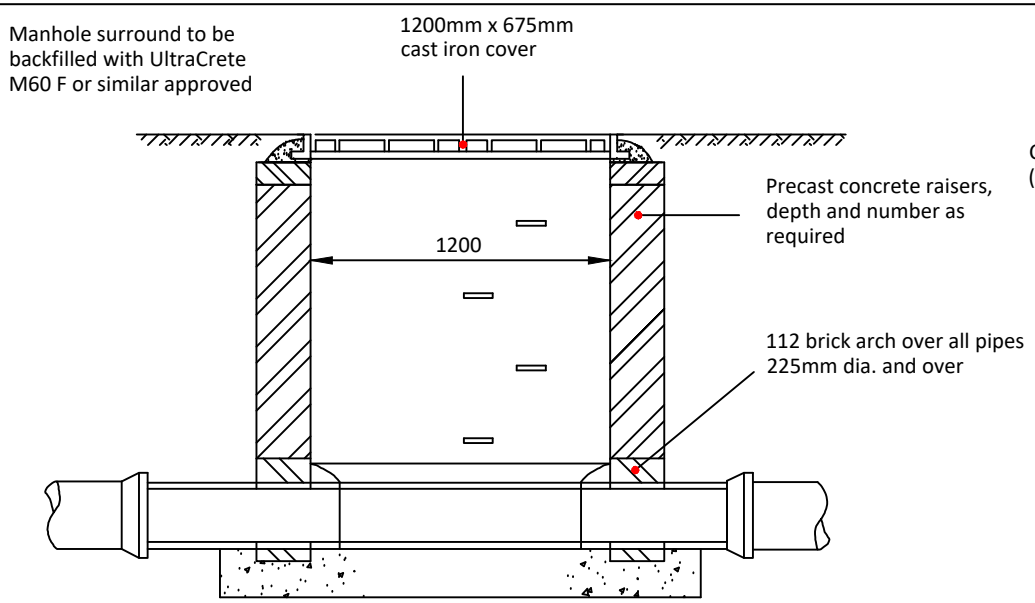

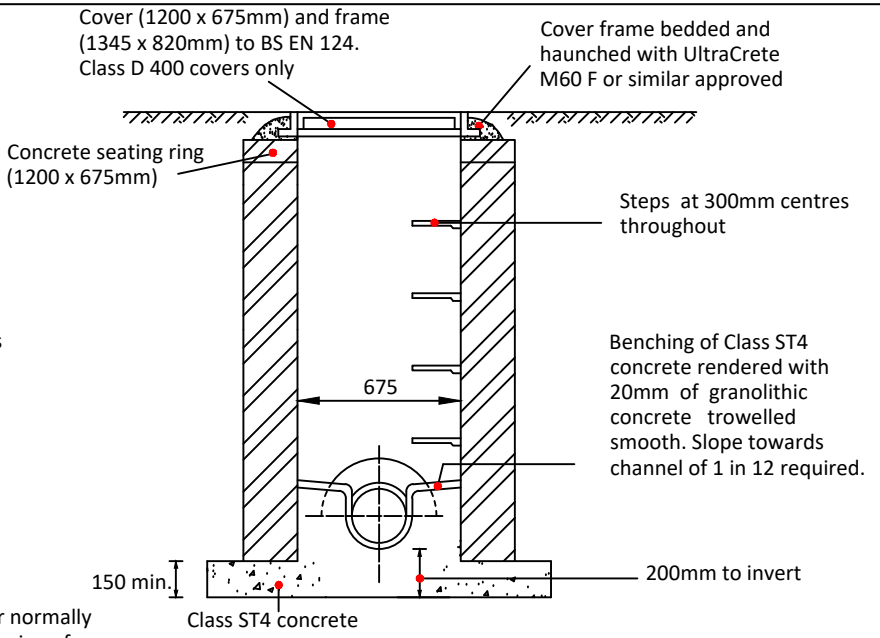

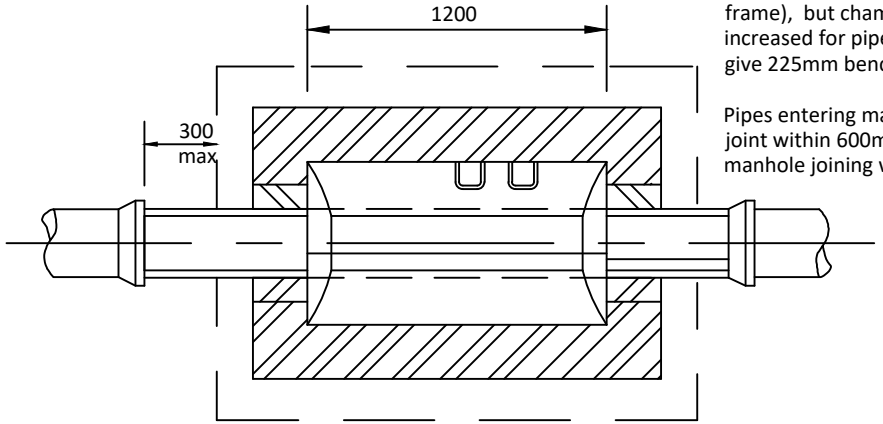

Internal dimensions of chamber normally 1200mm x 675mm (as clear opening of frame), but chamber width should be increased for pipes larger than 225mm dia. to give 225mm benching each side

Pipes entering manholes shall have a flexible joint within 600mm of the inside face of the manhole joining with a short `rocker' pipe

NOTES

1. All drainage works shall be in accordance with NYC Specification Section 05.
2. Pipe bedding, laying and backfilling shall be in accordance with NYC Specification Section 05.
3. Brick manholes to be used only where permitted under NYC Specification Section 05.
4. Chamber sizes shall comply with NYC Specification Table 05-04.
5. Flexible joints shall be provided to the first two pipe joints adjacent to manholes.
6. Additional protection shall be provided to pipes with cover less than 1.2 m in accordance with NYC Specification.
7. Benching slope not flatter than 1 in 30.
8. All dimensions in millimetres

Do not scale

REVISIONS	
VERSION	DETAILS
2	REVISED IN ACCORDANCE WITH NYC SPECIFICATION FOR HOUSING AND INDUSTRIAL ESTATE ROADS AND PRIVATE STREET WORKS, APRIL 2025

NORTH YORKSHIRE COUNCIL
Environment Directorate

PROJECT: STANDARD DETAILS

DATE: SEPTEMBER 2025

DRAWING TITLE: C4A-1 - DRAINAGE
PRECAST RAISER MANHOLE (1.0m to 1.5m)

SCALE: Not to Scale

Revision 2

© Crown Copyright North Yorkshire Council

ORIGINAL DRAWING SIZE A4