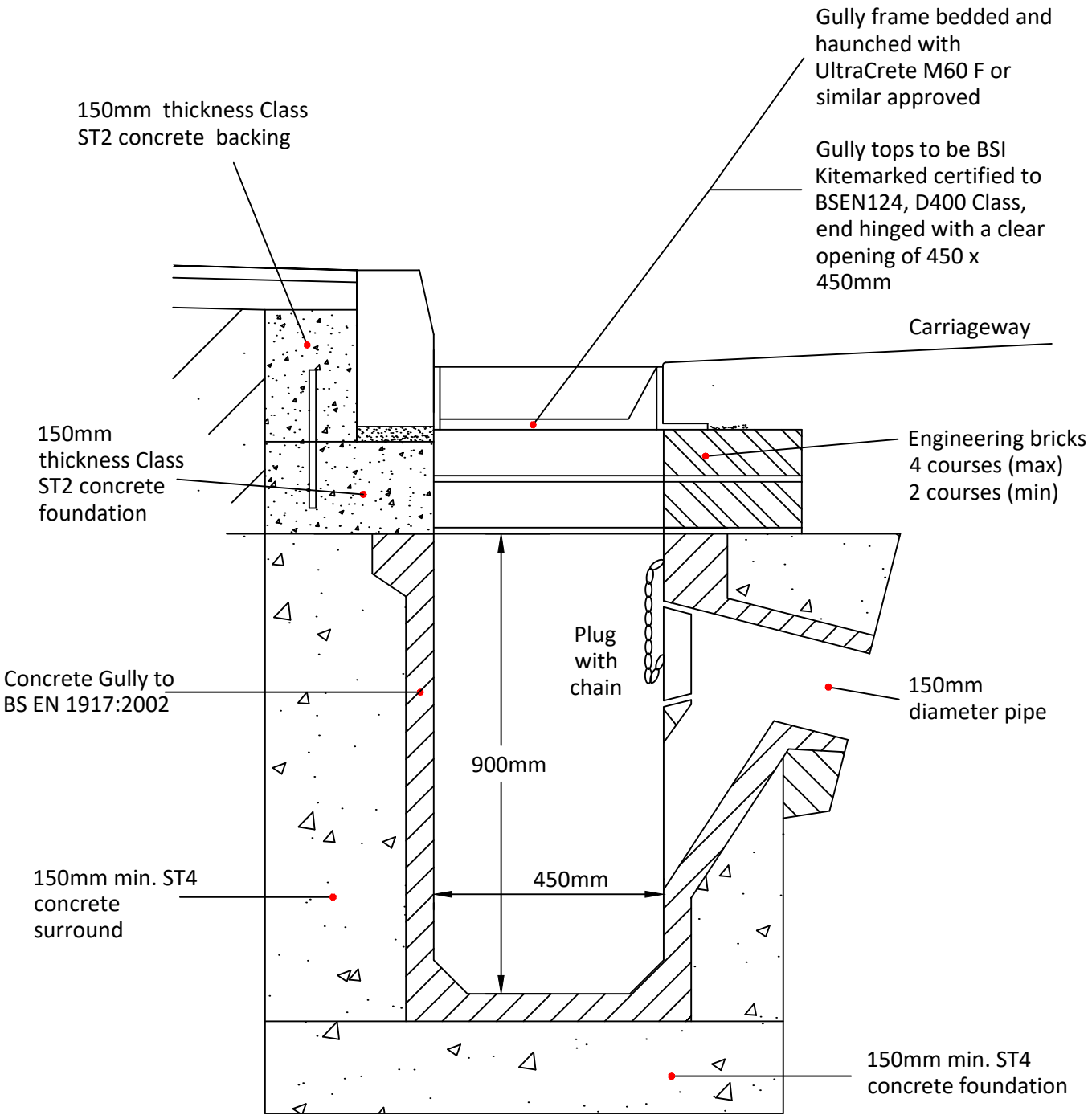

NOTES

1. All drainage works shall be in accordance with NYC Specification Section 05.
2. Pipe bedding, laying and backfilling shall be in accordance with NYC Specification Section 05.
3. Gully grates to be set 5–10mm below adjacent channel level.
4. All dimensions in millimetres

Do not scale

REVISIONS	
VERSION	DETAILS
C	REVISED IN ACCORDANCE WITH NYC SPECIFICATION FOR HOUSING AND INDUSTRIAL ESTATE ROADS AND PRIVATE STREET WORKS, APRIL 2025

North Yorkshire Council
Environment Directorate

PROJECT: STANDARD DETAILS

DATE: September 2025

DRAWING TITLE: C5 - PRECAST CONCRETE ROAD GULLY

SCALE: Not to Scale

Revision C

© Crown Copyright North Yorkshire Council

ORIGINAL DRAWING SIZE A4