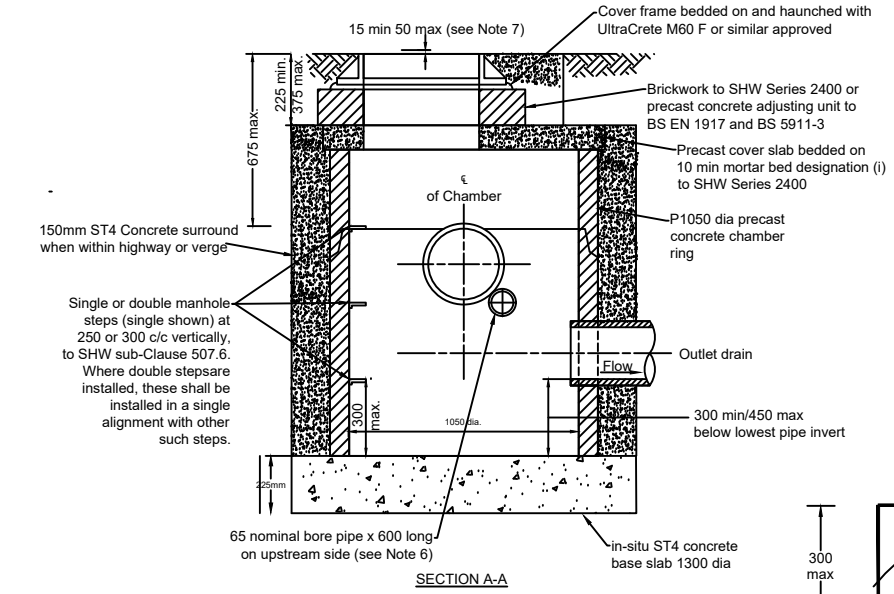

SECTION A-A

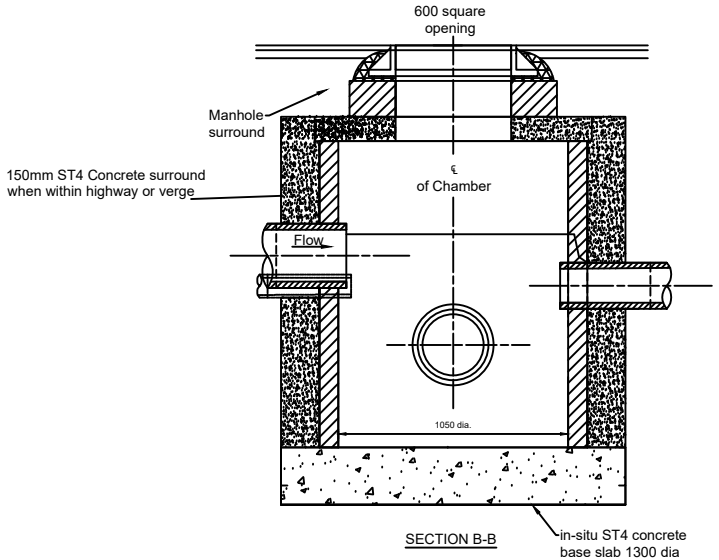

SECTION B-B

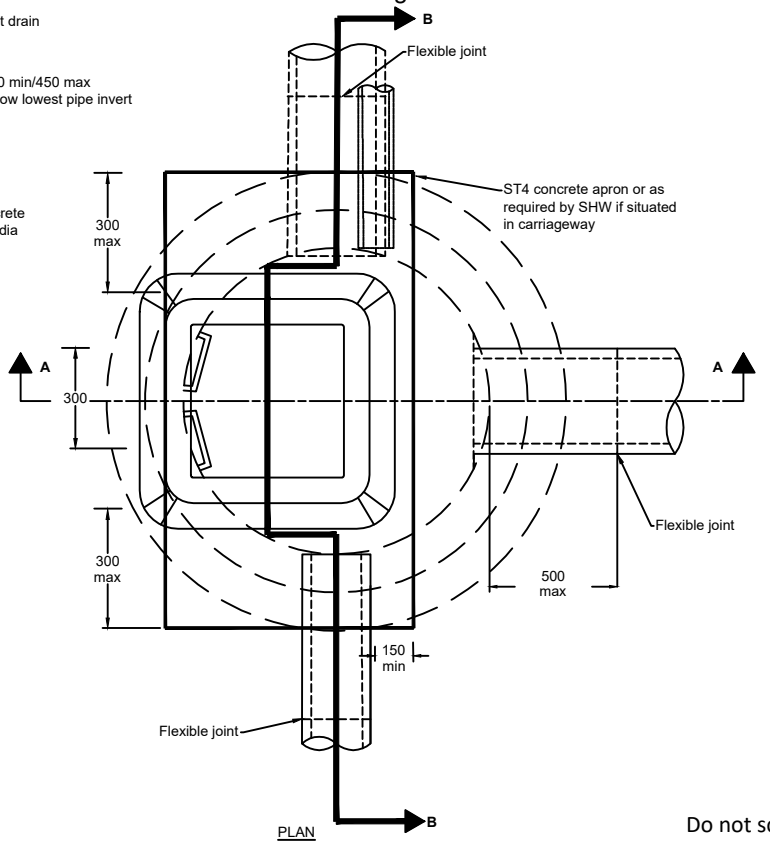

PLAN

NOTES

1. All drainage works shall be in accordance with NYC Specification Section 05.
2. Pipe bedding, laying and backfilling shall be in accordance with NYC Specification Section 05.
3. Highway catchpits to be used where required in accordance with drainage design and NYC Specification.
4. Sump depth to be 300–450 mm minimum below lowest pipe invert.
5. Flexible joints shall be provided to first two pipe joints adjacent to chambers.
6. Catchpit to be constructed in precast concrete to BS EN 1917 and BS 5911-3.
7. Invert details, number of branches and type of manhole tops are shown on the Drawings.

NOTES CONT.

8. Pipes to be built into the catchpit with designation (i) mortar are shown on the Drawings .
9. Pipe to be built into catchpit to drain lower portion of trench. Pipe is to be placed above any concrete bed to filter drain.
10. The catch pit top is to be set as dimensioned below the adjacent:
    A, hard shoulder (for verges)
    B,hard strip (for dual 2 central reserve)
    C, finished level in other locations.
11. Catch pit to be bedded on UltraCrete QC10 F or similar approved
12. All dimensions in millimetres

Do not scale

REVISIONS	
VERSION	DETAILS
B	REVISED IN ACCORDANCE WITH NYC SPECIFICATION FOR HOUSING AND INDUSTRIAL ESTATE ROADS AND PRIVATE STREET WORKS, APRIL 2025

NORTH YORKSHIRE COUNCIL
Environment Directorate

PROJECT: STANDARD DETAILS

DRAWING TITLE: C7 - CATCHPIT

DATE: SEPTEMBER 2025

SCALE: Not to Scale

Revision B

© Crown Copyright North Yorkshire Council

ORIGINAL DRAWING SIZE A4